CAAM/NEUR 415: Midterm Exam Spring 2006

1. The Active Patch

   (a) [15 points] Write the active patch equations for the Hodgkin-Huxley model with an external stimulus $\mathrm{I}_{\mathrm{stim}}$. Write the gating variable dynamics in both the $\alpha_y(V), \beta_y(V)$ and $y_\infty(V), \tau_y(V)$ forms where $y \in \{m, h, n\}$.

   (b) [5 points] Sketch the three $y_\infty(V)$ functions.

   (c) [15 points] Describe the notion of threshold for a short stimulus. For a suprathreshold response, describe the generation of an action potential in terms of V and m, h, and n gates as well as the related currents including repolarization and reset.

2. It is clear that neurons are packed tightly in the living brain. Here we relax the assumption of extracellular resistance being negligible and see what we have been ignoring. Assume a cylindrical fiber with radius a_i and assume a cross-sectional annulus of extracellular space with radius $a_e - a_i$.

   Consider the following circuit diagram depicting transmembrane and longitudinal (both intracellular and extracellular) currents.

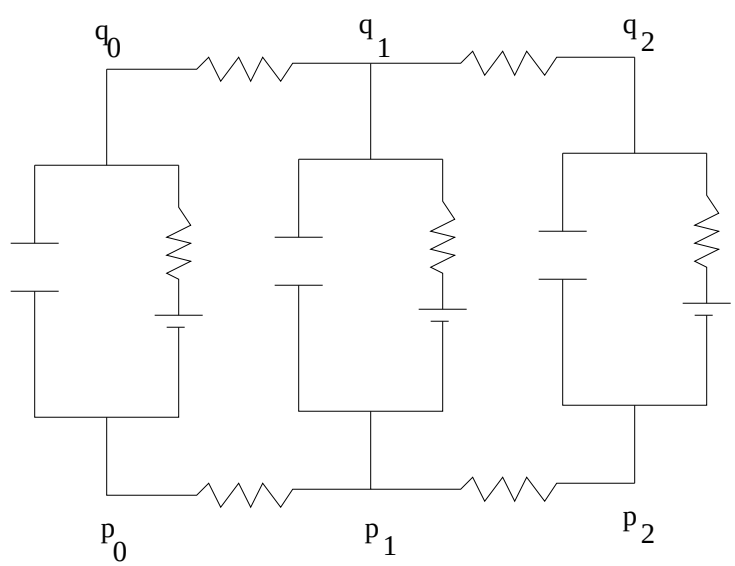

(a) [10 points] Carefully label the elements in the diagram including potentials, currents, capacitors, resistors, and batteries. In an adjoining legend relate the units you are assuming for the components labeled.

(b) [10 points] Construct the current balances related to the interior node with potential p_1 and the exterior node with potential q_1.

(c) Write these balances of current in terms of potentials and take the limit as $dx \to 0$ for each equation. Write the related PDE in terms of interior potential $p(x,t)$ and extracellular potential $q(x,t)$.

(d) [5 points] Sum these two equations to derive a conservation equation. What is being conserved?

(e) [15 points] Derive the PDE for the transmembrane potential following the steps. 1) Solve the conservation equation for the intracellular current in terms of the transmembrane potential $v(x,t) = p(x,t) - q(x,t) - V_L$ and 2) substitute into the p_1 equation, and 3) rewrite the rest of the equation in terms of v to get

$$C_M \frac{\partial v}{\partial t} + g_L v = G \frac{\partial^2 v}{\partial x^2}$$

where $G = \frac{G_i G_e}{G_i + G_e}$ and $G_i = \frac{a_i}{2R_2}$ and $G_e = \frac{(a_e - a_i)^2}{2a_i R_2}$. As a_e gets large what formula do we recover?

(f) [20 points] Write the current balance equations at all six nodes as a matrix equation. Write the forward and backward Euler updates for this equation.